CDAW 2010, Sep 21-24, San Diego

Basic issues of interplanetary magnetic flux ropes (magnetic structure of magnetic cloud)

K. Marubashi
Korea Astronomy and Space Science Institute

Outlines

- Basic characteristics of magnetic flux rope (force-free fields)
- Two models: cylinder and torus
- Fundamental mathematic parameters
- Possible relationships between interplanetary and solar (coronal) structures
  (IP flux rope vs. polarity inversion line
  sigmoid
  post-eruption arcade
  mainly orientation and magnetic chirality)

This is not a review talk. The purpose is to make clearer the meaning of flux rope parameters. I don't mention many important works in the related topics.

Conceptual views of magnetic clouds

1. Flux rope (nested helical fields) extended from the Sun

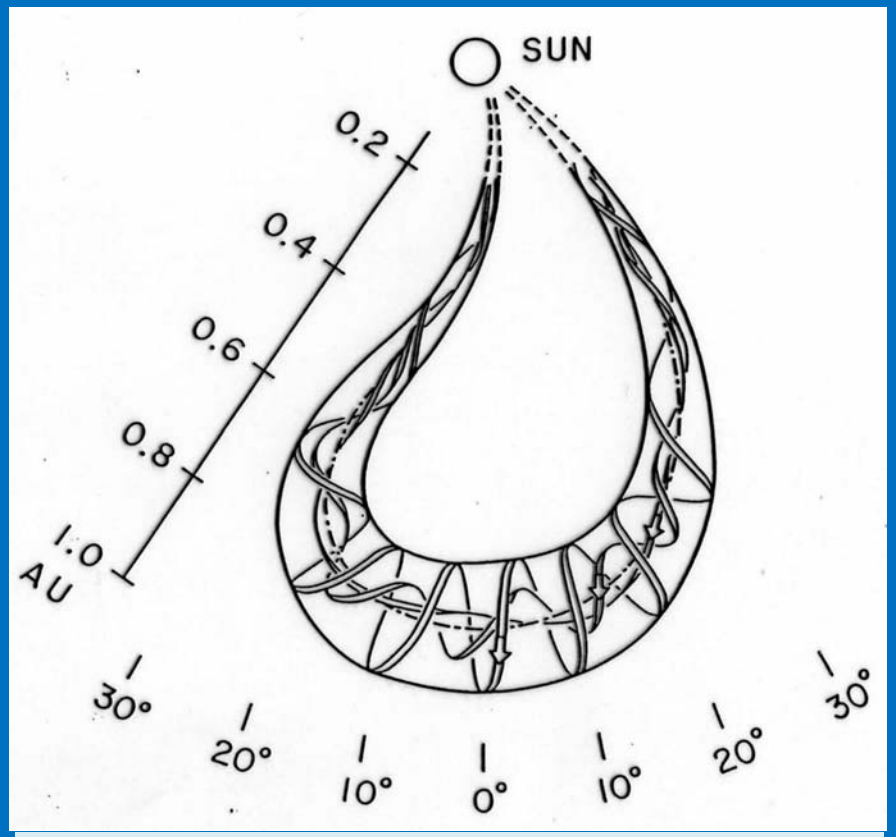

A flux rope extending in a plane nearly parallel to the equatorial plane

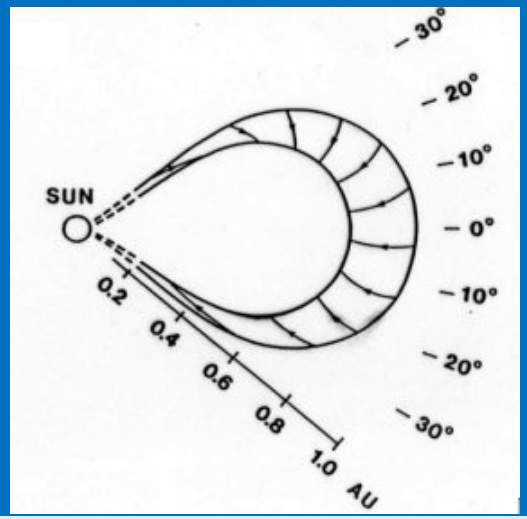

A flux rope extending nearly perpendicular to the equatorial plane (internal fields are not shown)

2. Plasmoid (image)

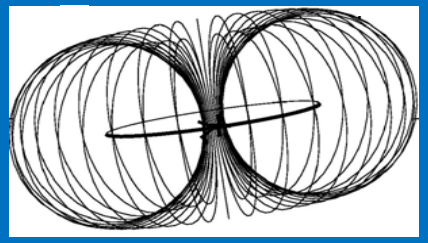

Two mathematical models (cylinder & torus)

Cylinder model

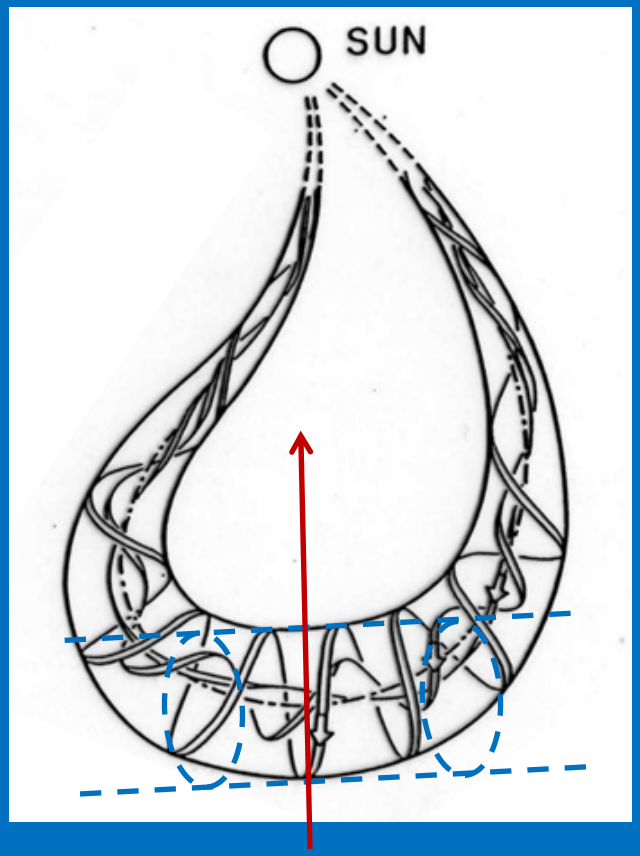

Torus model

Torus model: to describe
local geometry,
not indicating the whole
structure were torus

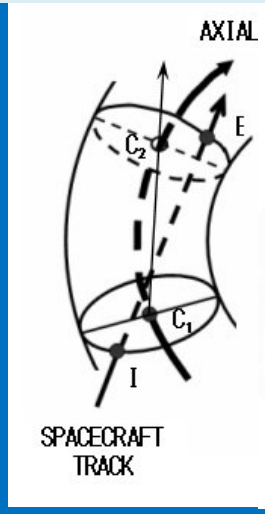

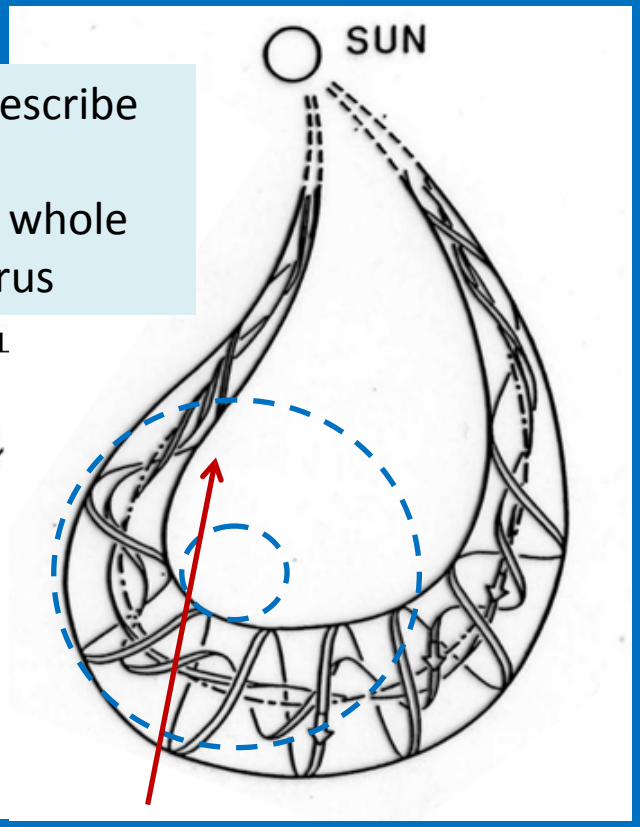

S/C passing near the apex:
Local Structure can be approximated by a cylinder shown by dashed line.

S/C passing near the flank:
Curvature effects should be taken into account, and the simplest approximation Is given by a torus geometry.

Cylinder model (constant-□ force-free model)

Constant-□ force-free field

The force-free condition (J // B)

$$\mathrm{rot}\, B = \pm \alpha B \ (\alpha > 0)$$

$$(\nabla \alpha) \cdot B = 0$$

under the condition: $-\nabla p = 0$

Assuming □ = const, and cylindrical symmetry

$$-\frac{dB_z}{dr} = \pm \alpha B_\varphi \quad \text{and} \quad \frac{1}{r}\frac{d}{dr}(rB_\varphi) = \pm \alpha B_z$$

By eliminating $B_{\square}$,

$$\left[\frac{d^2}{dr^2} + \frac{1}{r}\frac{d}{dr} + \alpha^2\right] B_z = 0$$

Thus, magnetic fields are:

$$B_z = B_0 \mathcal{J}_0(\alpha r) \quad \text{and} \quad B_\varphi = \pm B_0 \mathcal{J}_1(\alpha r)$$

where J_0 and J_1 are 0-th and 1-st order Bessel functions, respectively, and B_0 is the magnetic field intensity at the axis.

Two internal field structures

+ sign (Right-handed chirality)

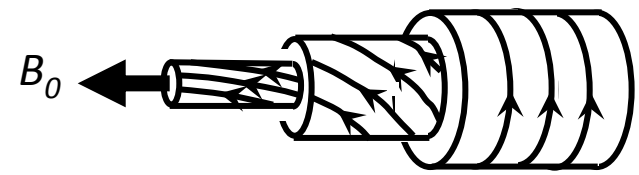

- sign (Left-handed chirality)

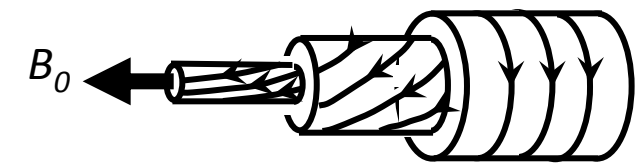

Field intensity variation with *r*

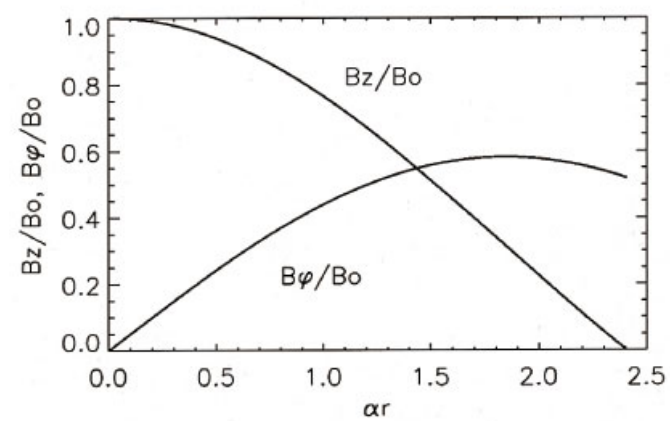

Magnetic field rotation, when passed near axis

Right-Handed: anti-clockwise rotation

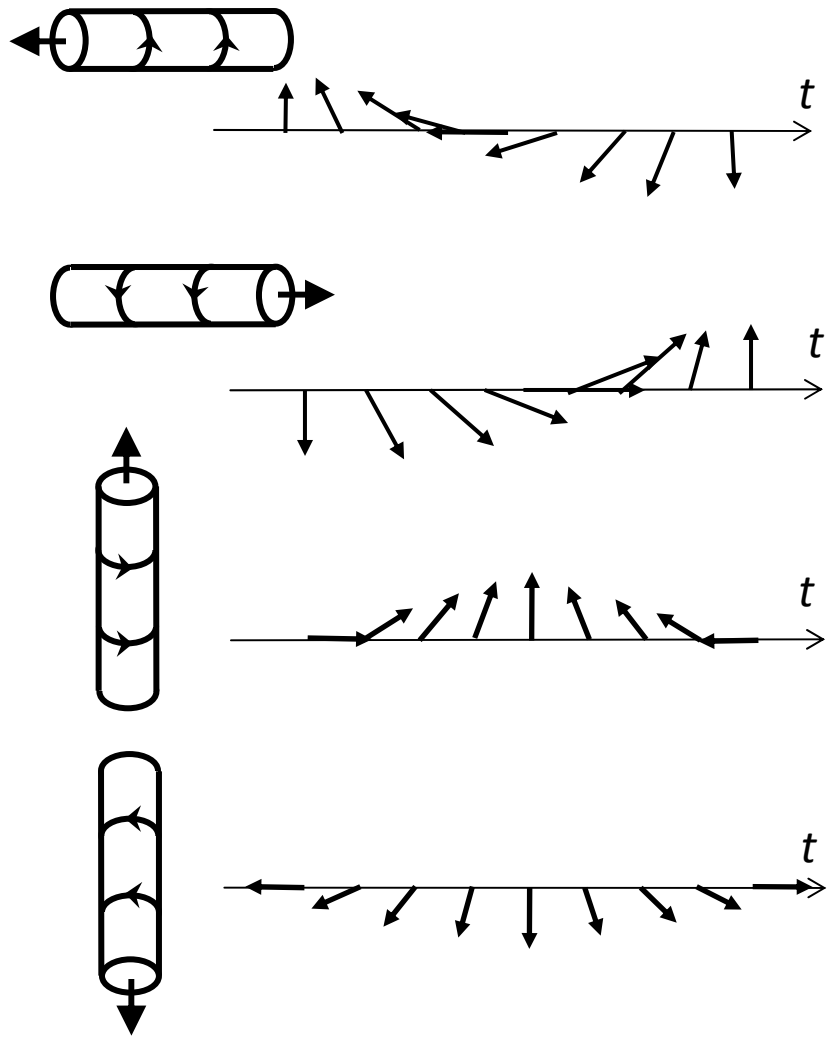

Left-Handed: clockwise rotation

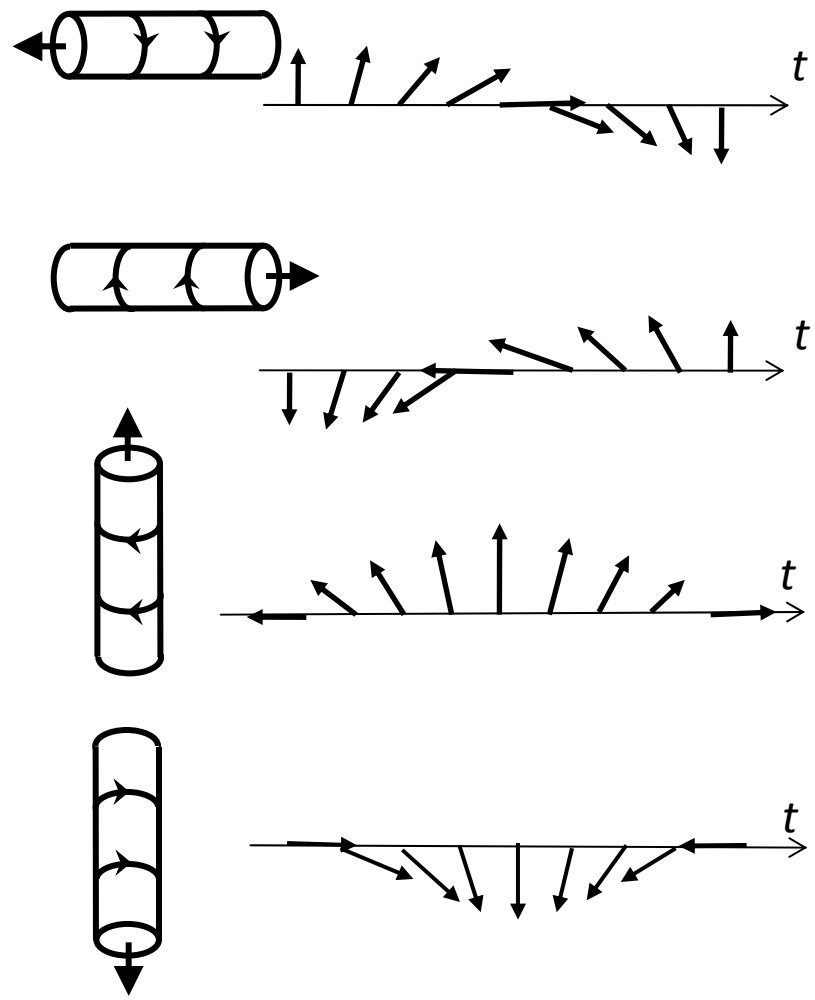

Model and parameters for fitting

Using the cylindrical coordinates, □, □, □,
magnetic fields in an self-similarly expanding cylinder can be written as:

$$B_\varphi = sB_0\mathcal{J}_1(\alpha r)/(1+t/T)^2$$

$$B_\zeta = B_0\mathcal{J}_0(\alpha r)/(1+t/T)^2$$

The cylinder radius changes as:

$$r = r_0(1+t/T)$$

The solar wind velocity observed by S/C is expressed by the sum of background speed, U_0 (assumed constant), and the Expansion speed,

$$v_\rho = \{\rho/(1+t/T)\}e_\rho$$

Parameters to determine the flux rope:

B_0, s (+1 for RH, -1 for LH)

r_0, T (determining expansion effects)

Parameters determining S/C encounter:

U_0,

□$_0$, □$_0$

p (impact parameter, sign being defined to be measured along the vector product of X-axis and cylinder axis, in the unit of r_0)

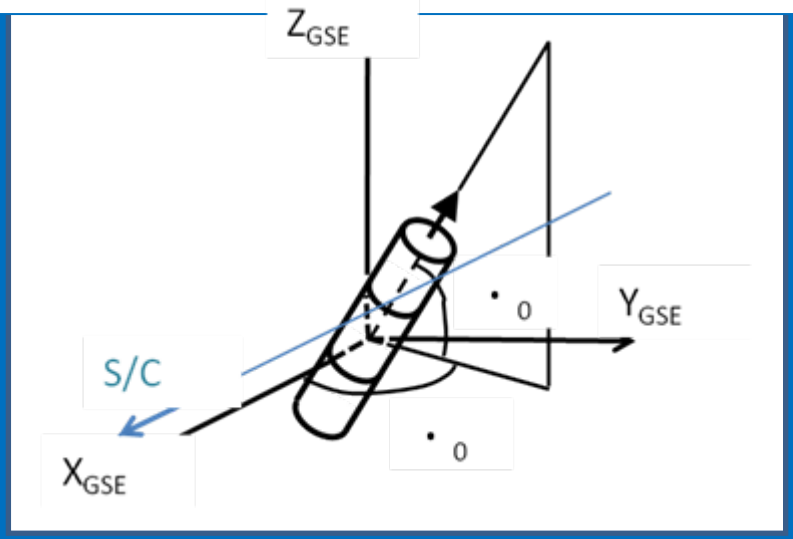

An example of cylinder-fitting,

MC of 2000-Jul-15

Bx, By, Bz, and Vsw (solar wind speed) data are used for least-squares fitting.

Dotted curves: from ACE/SWICS

Dashed line in T:
proton temperature statistically expected from Solar wind speed

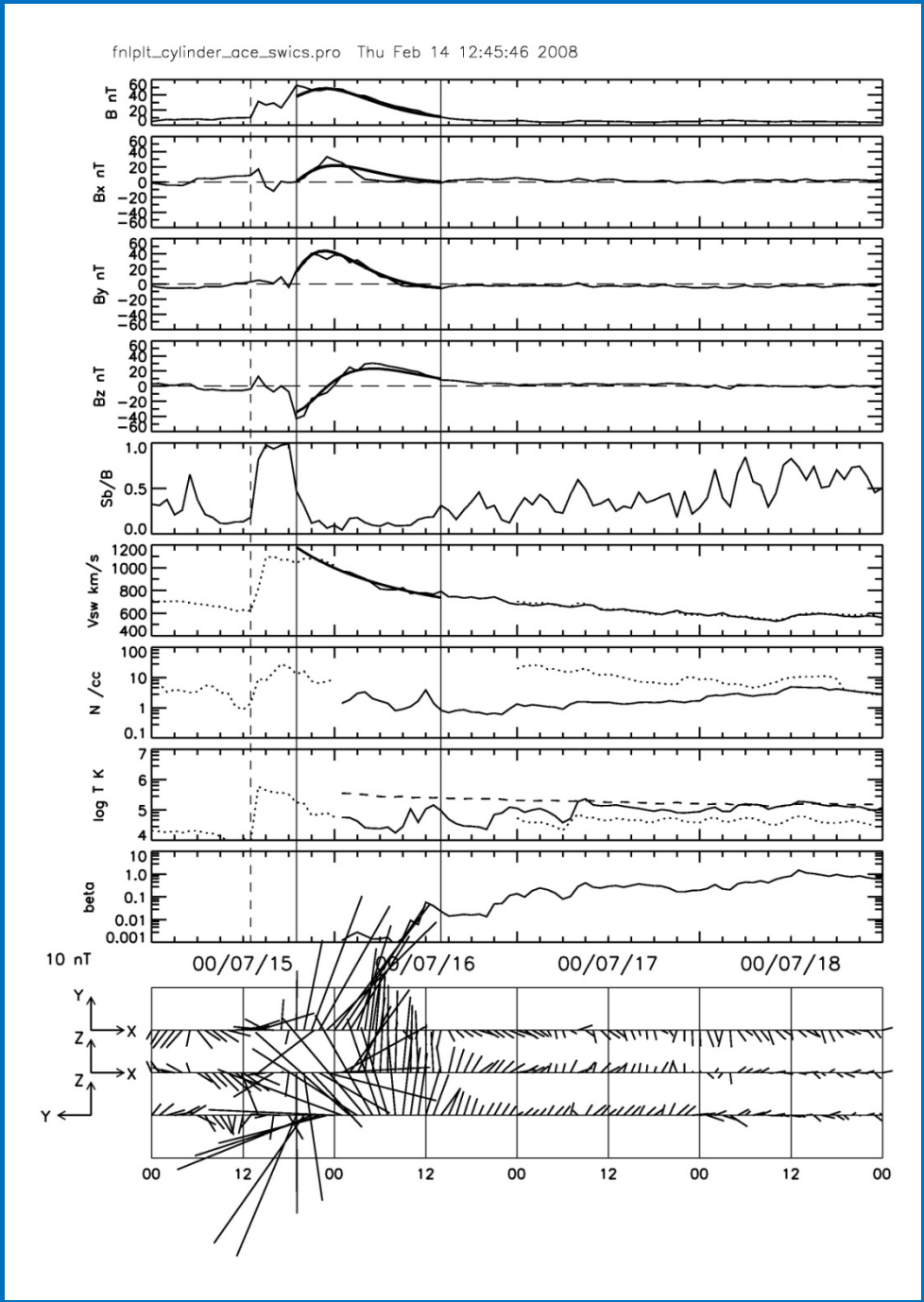

Parameters obtained from fitting

Dotted line: time variation of cylinder radius

Rsat = r coordinate of S/C, as a function of t

U_0 in km/s

r_0 in AU unit

p in unit of r_0

T in hours

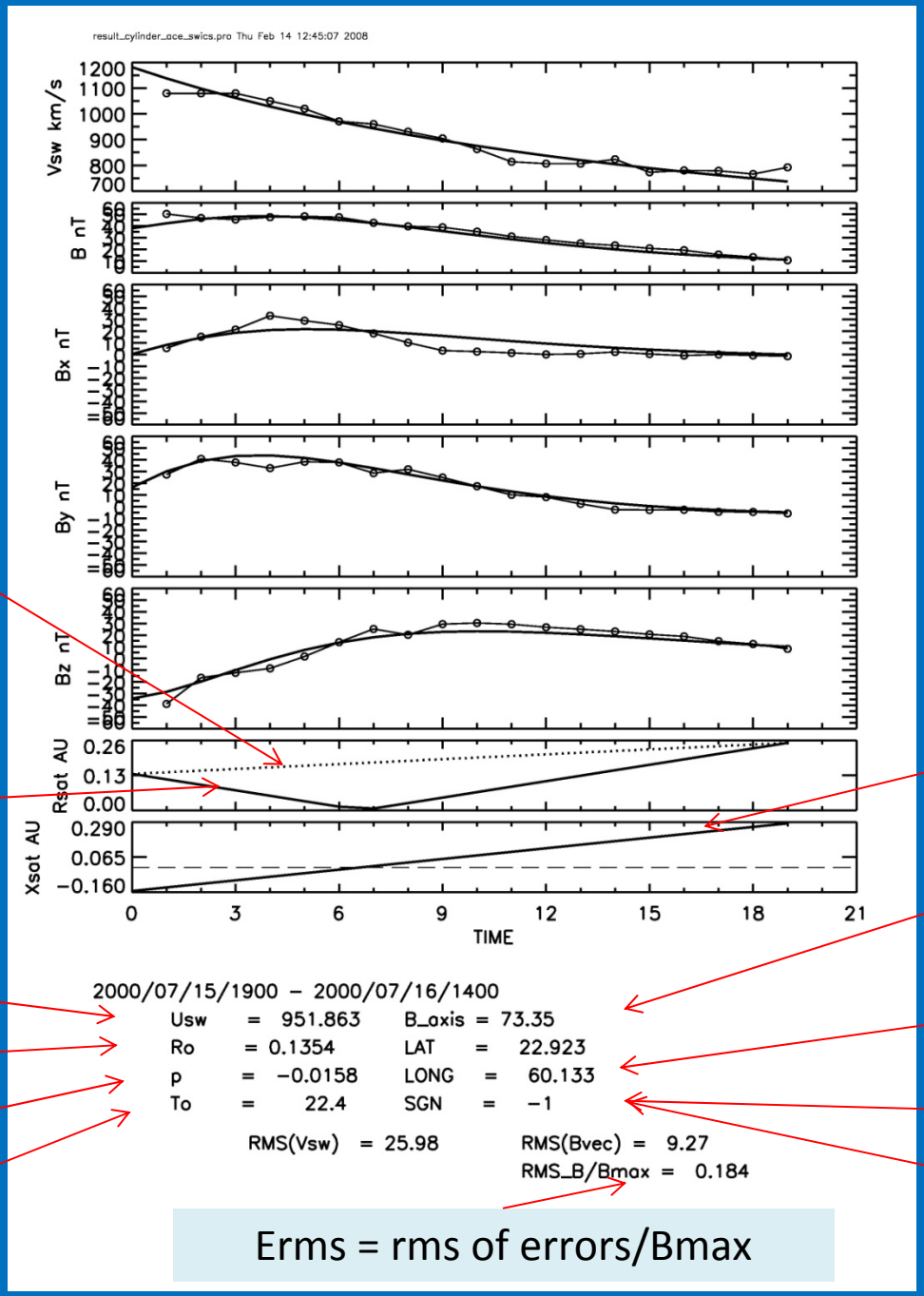

Erms = rms of errors/Bmax

Xsat = X coor. of S/C

B_0 in nT

$\square_0$ in degree

$\square_0$ in degree

s

Comparison between MC and solar magnetic fields

2000/07/14 12:48

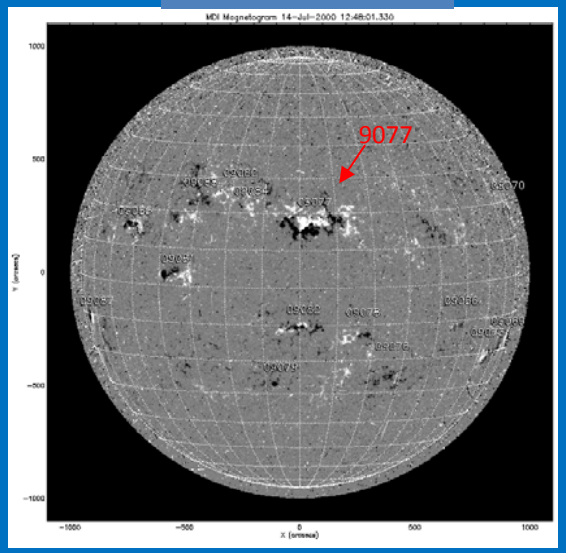

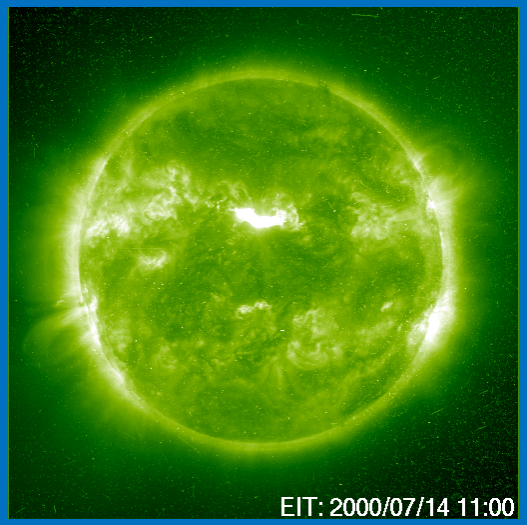

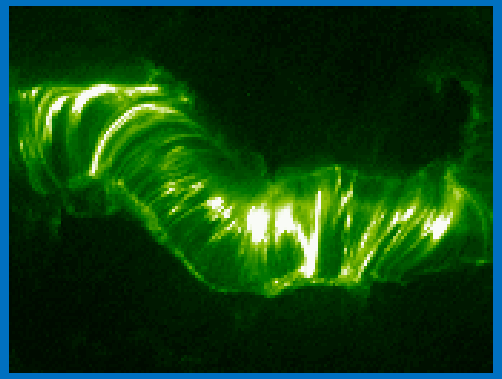

T195 2000-Jul-14 10:59:55

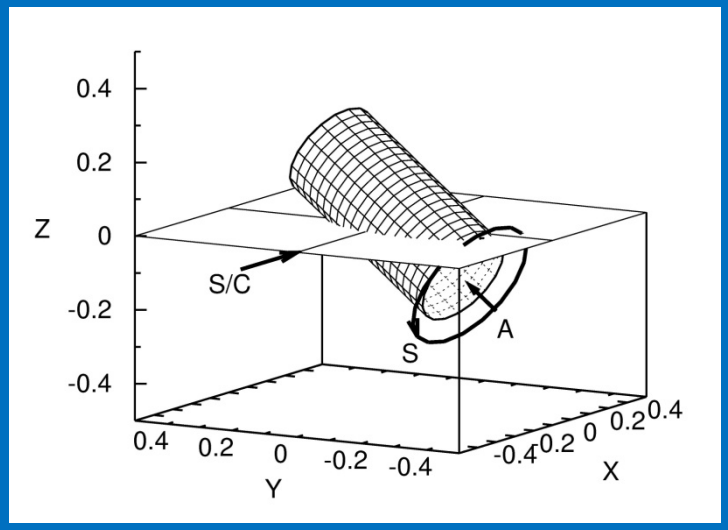

The MC axis directions projected on YZ-plane generally coincide with the orientations of polarity inversion lines, sigmoids in the source regions, or post-eruption arcades, within □30° . (Need to confirm further)

High correlations are seen in chirality, and relation between N/S hemisphere and R/L.

Caution: When angles between MC-axis and X-axis are small, problems arise.

Torus model (constant-□ force-free structure)

Expressions for the internal magnetic fields within a torus are complicated. (See Romashets and Vandas, GRL 106, 10615, 2003. for details)

To calculate the torus field, following parameters are required.

R_M: major radius of torus
r_m: minor radius of torus
B_T: a parameter determining intensity of toroidal field

Other quantities needed to calculate magnetic field to be observed along the S/C trajectory are:

U_T: speed of translational motion
T: expansion parameter
□$_n$, □$_n$: latitude and longitude angles of torus-plane normal
py, pz : impact parameters

We assume the following:

$U_T = U_{T0}$ (const) – $D_f t$ (deceleration)
$r_m(t) = r_{m0}(1 + t/T)$

The final parameter we need is
s : sign of magnetic field chirality

When calculating magnetic fields along S/C trajectory, it is convenient to use a coordinate system shown below.

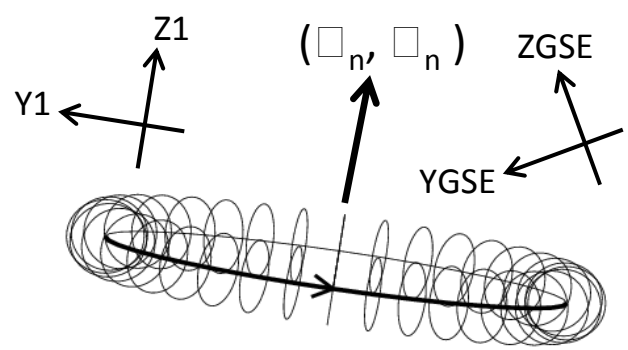

Normal vector lies in X1-Z1 plane.

When the torus-fitting is done, we search “solution” in either of the flank regions: near the left-side edge (Bx < 0), or near the right-side edge (Bx > 0).
(reason: Near the torus apex (where cylinder models are valid), infinite numbers of torus models can yield solutions.)

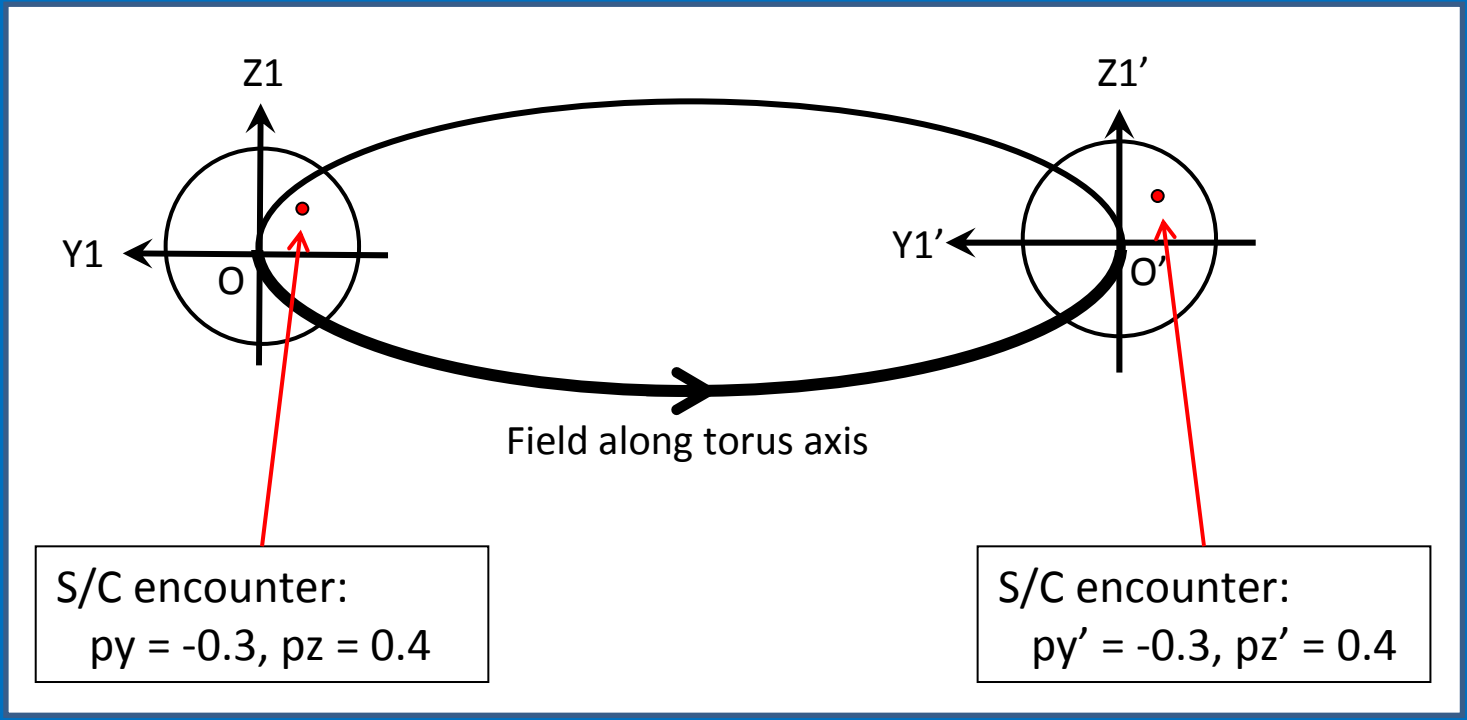

We specify the side of S/C encounter by a parameter DRCT:

DRCT = -1 (for Bx < 0 on the torus axis in the Y-Z plane)

DRCT = +1 (for Bx > 0 on the torus axis in the Y-Z plane)

An example of torus-fitting: Feb-04-1998 MC

This MC shows magnetic filed rotation of 320° in the Y-Z plane (GSE).

In principle, the rotation angle obtained from cylinder models cannot exceed 180° .

This is one of the important reasons why we need a torus model.
(In torus model, S/C can pass the MC two times, equivalently.)

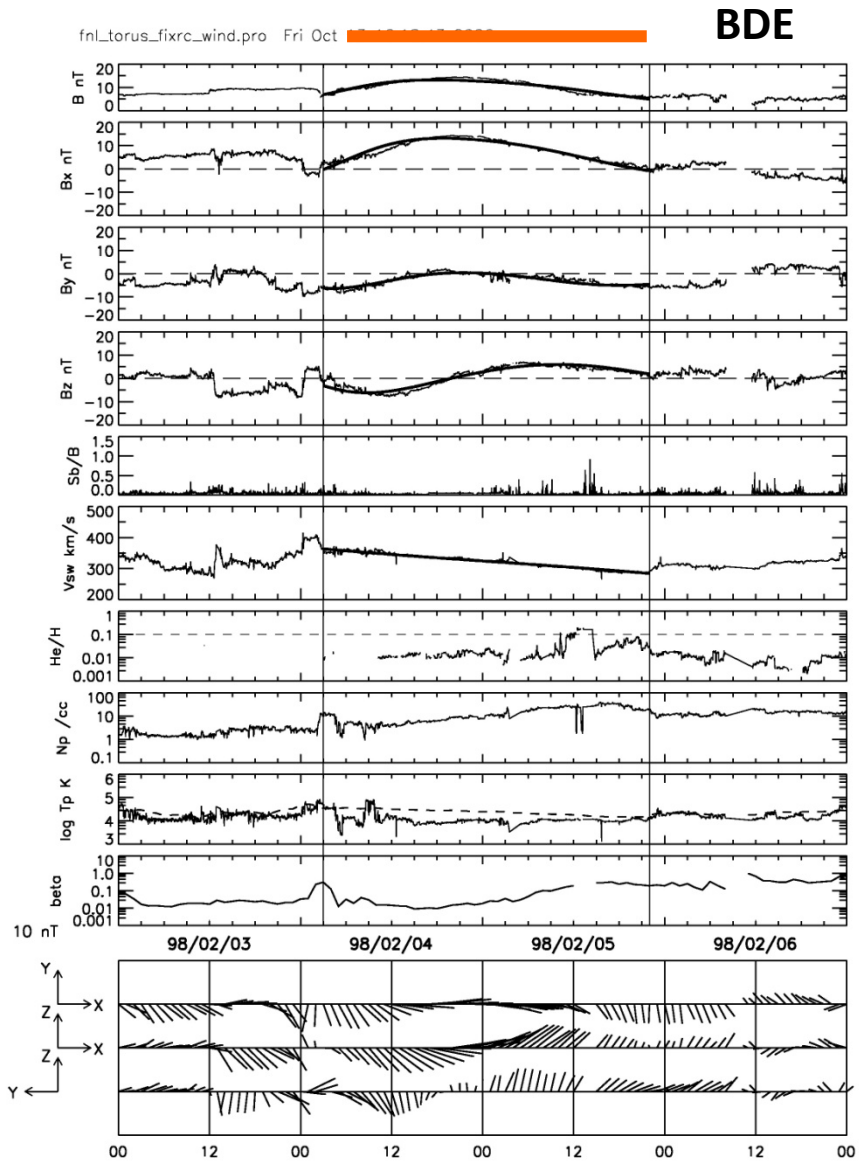

Note 320° field rotation in Y-Z plane!

Details of the result

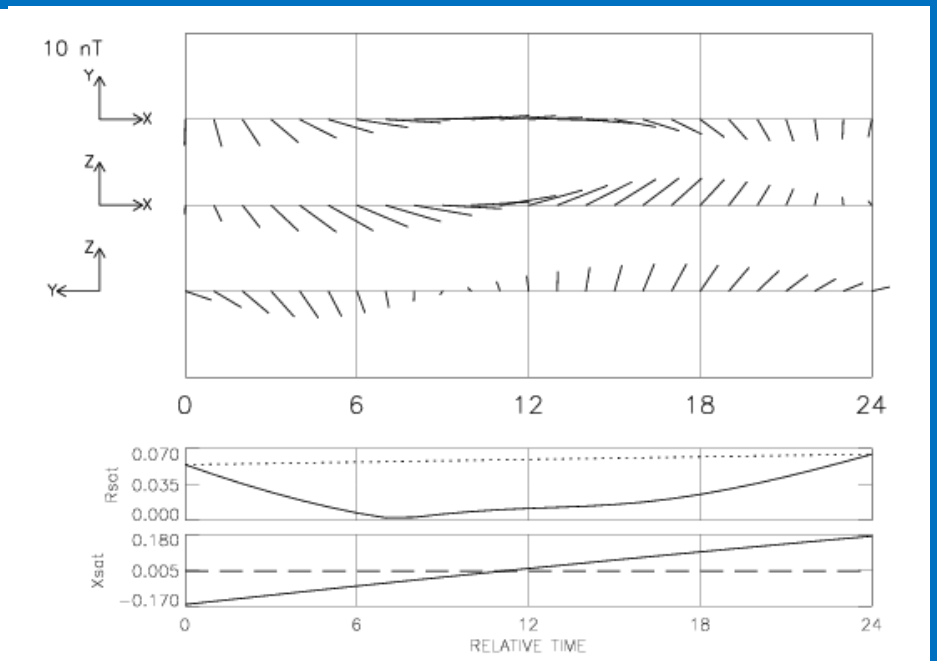

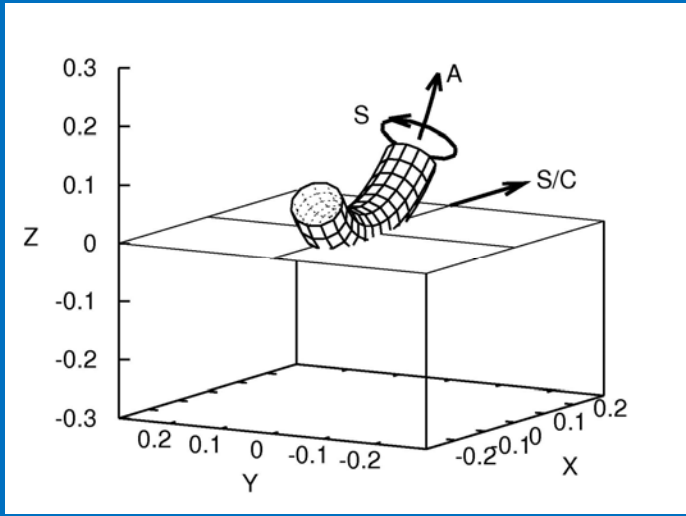

3-D view of S/C encounter

U_{T0}
D_f
$\square_n$
$\square_n$
DRCT
S
B_T
R_M
r_{m0}
T
pz
py

U_bulk = 358.4 km/s
decel rate = 1.607 km/s/hour
theta0 = −7.9
phi0 = 277.6
drct = 1
sgn =−1
B_axis = 16.2
R_curv = 0.201 AU
r_cyl = 0.0542 AU
T_xpnd = 226.7 hrs
I.P_z (GSE) = 0.0955
I.P_y (GSE) =−0.1645
I.P_z (rotated) = 0.1497
I.P_y (rotated) = 0.1174
Calculated Traverse Time = 43.0 hrs

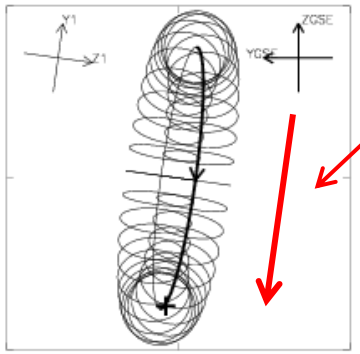

This direction can be taken to be consistent with the orientation of polarity inversion line of solar solar magnetic field in the source region.

Example of torus-fitting (2): July-15-2000 MC

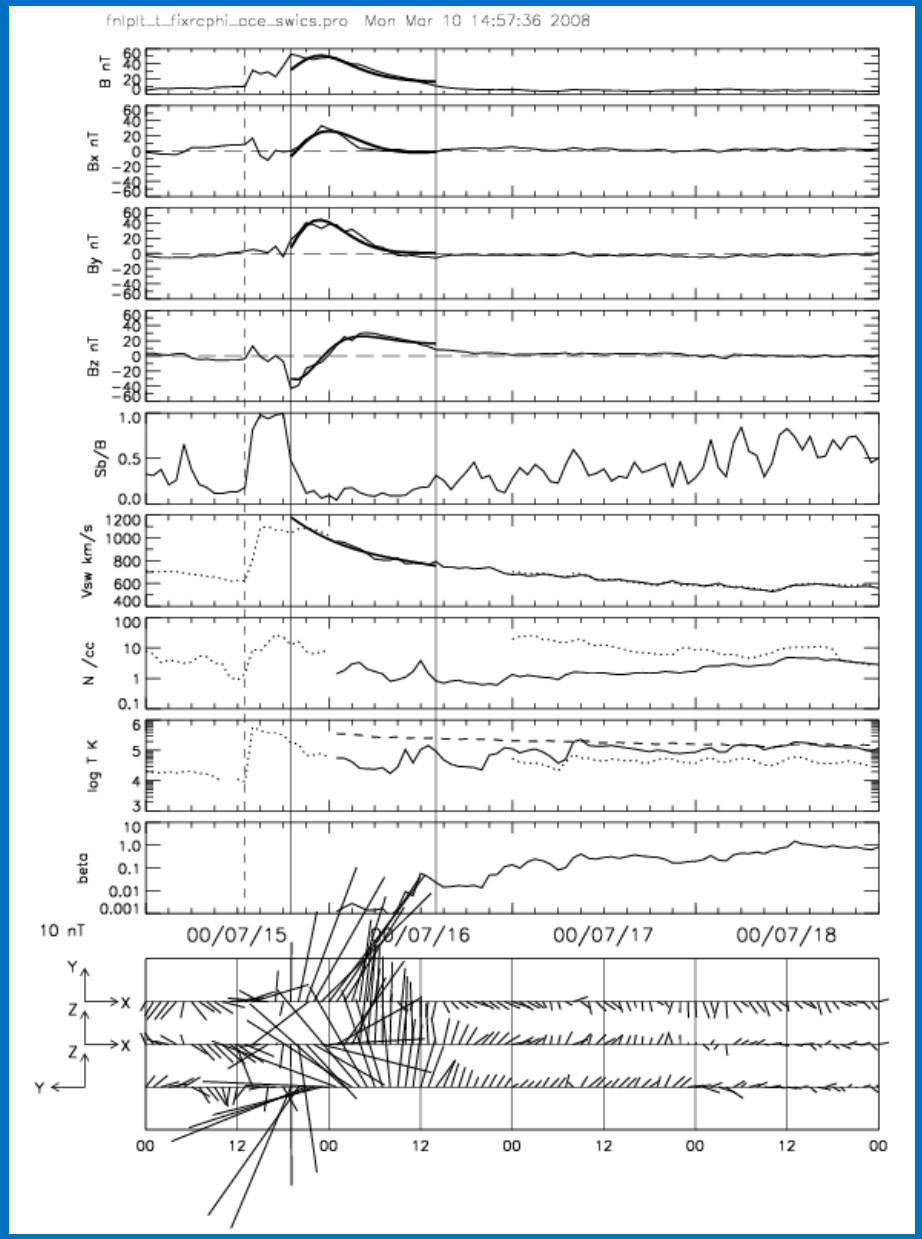

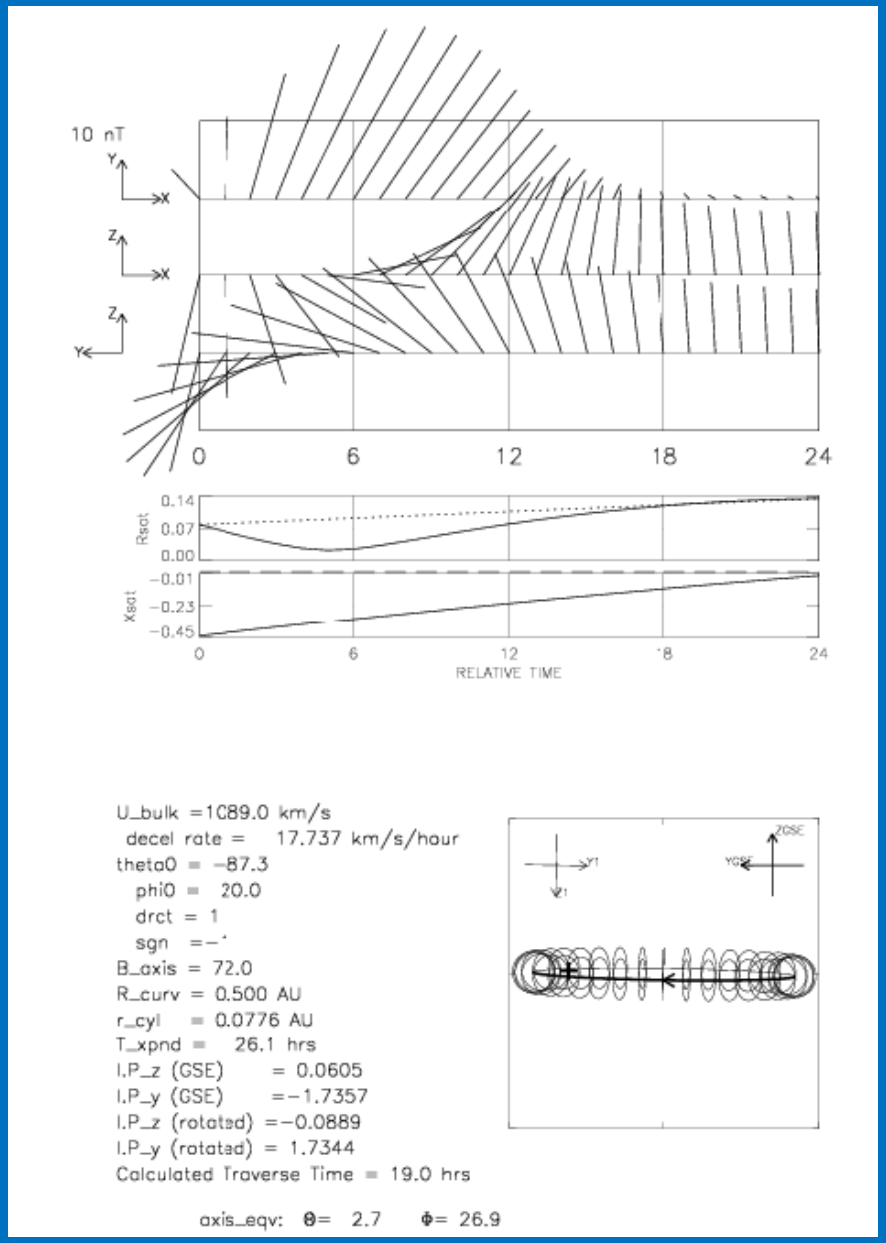

Comparison: cylinder vs. torus, Jul-15-2000 MC

2000/07/14 12:48

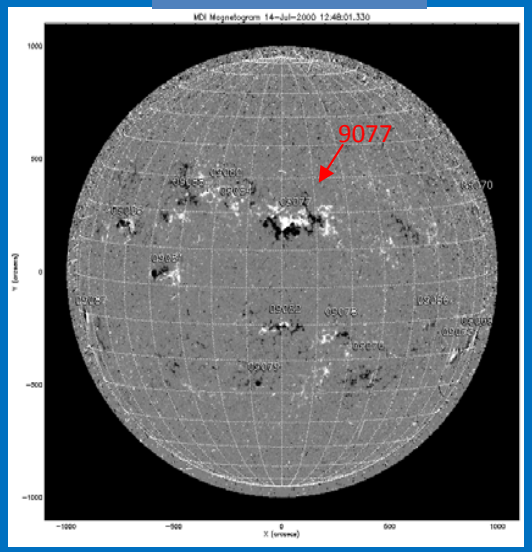

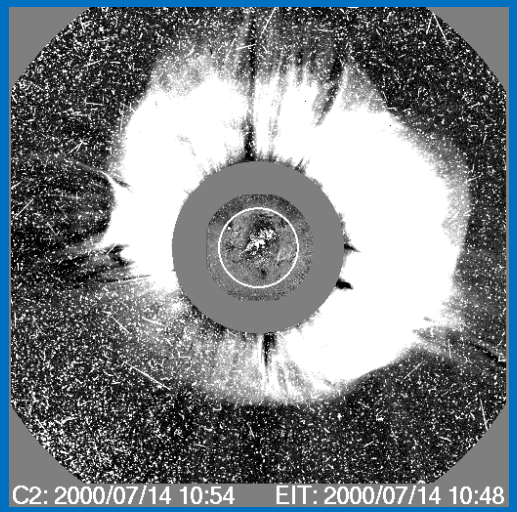

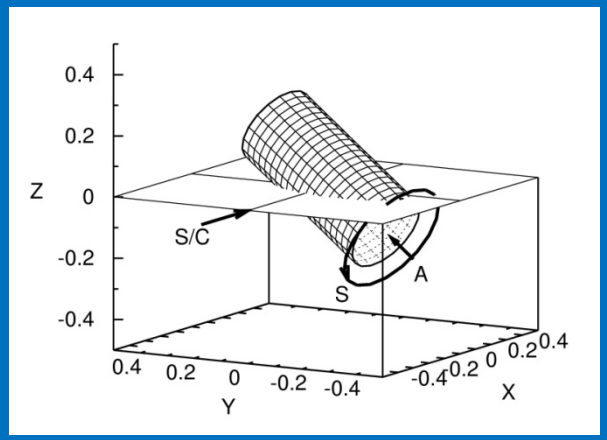

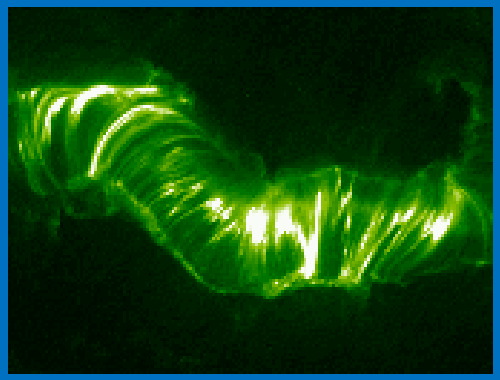

T195 2000-Jul-14 10:59:55

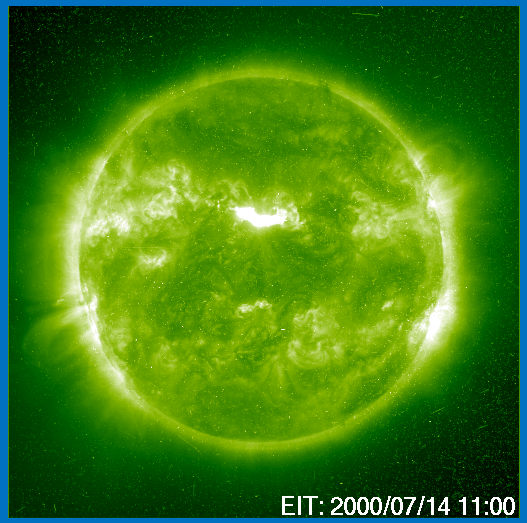

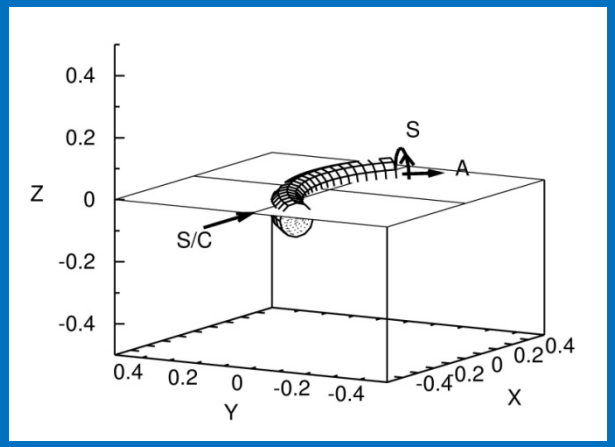

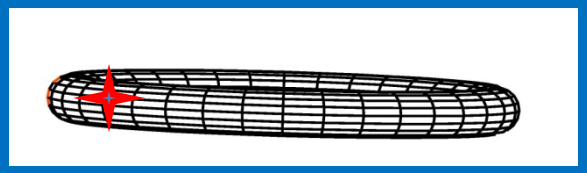

Both models give MC orientation consistent with solar conditions. (differences exist.)

Example (3): Mar-19-2001 MC

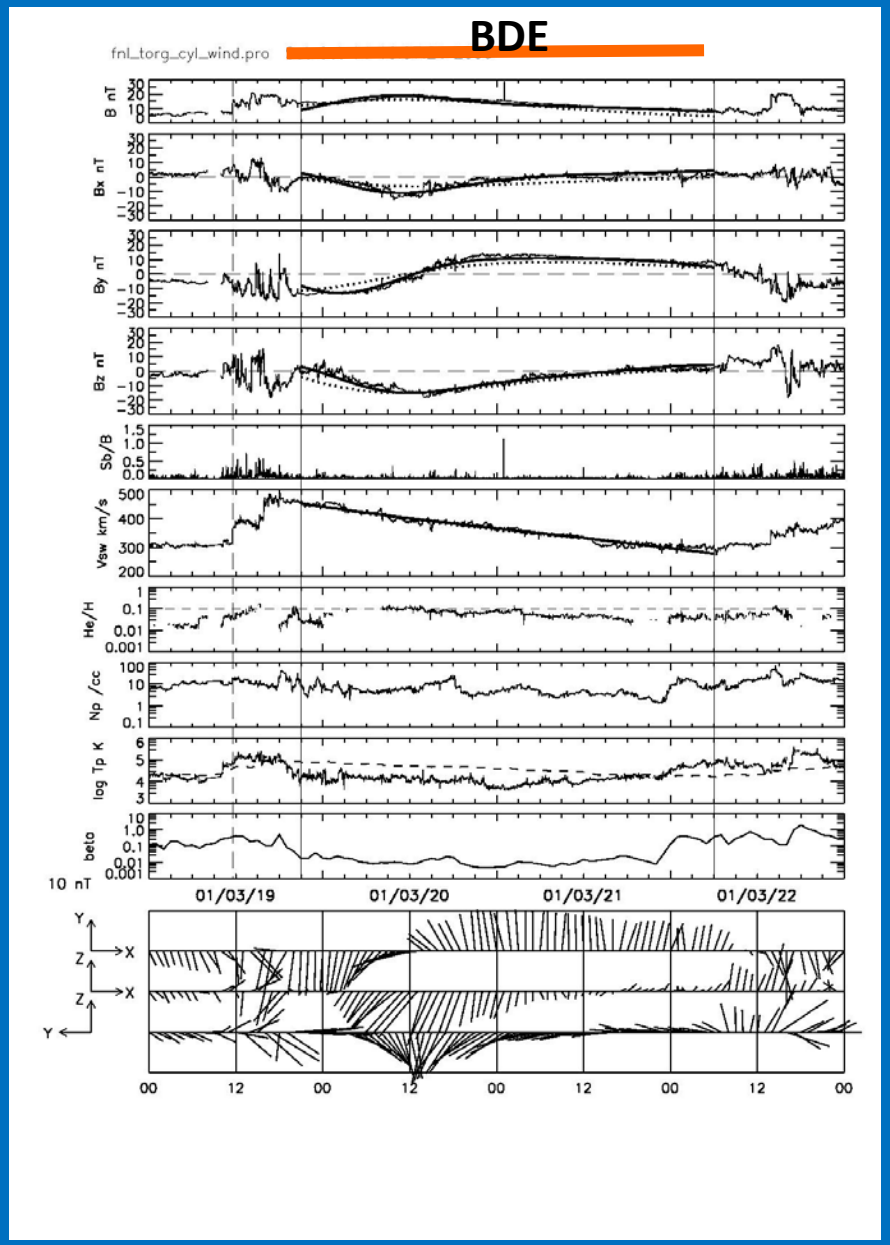

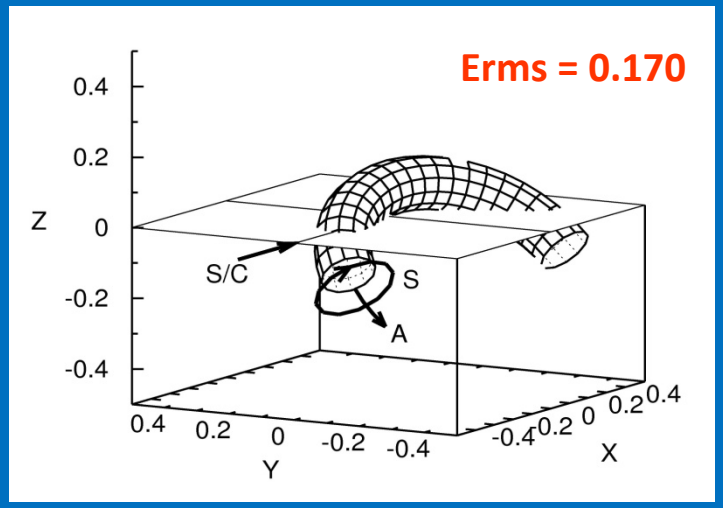

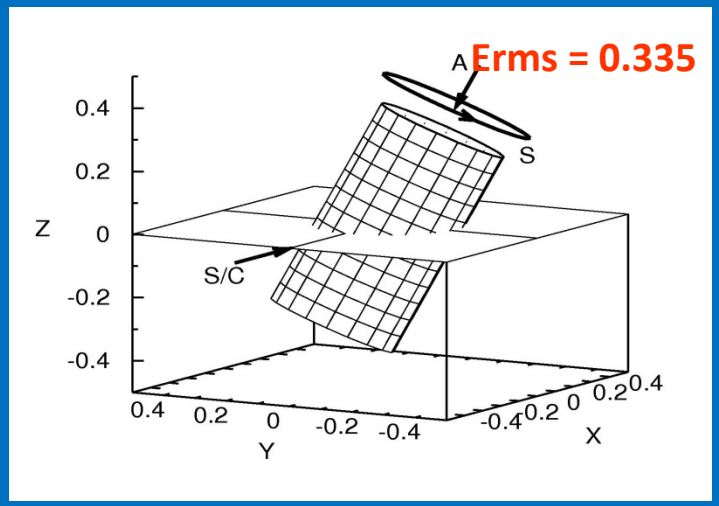

Two models give very different geometries.
→Another reason why we need a torus model.

Summary

Model fitting studies of MCs are useful to confirm the existence of MCs. Here, we explained parameters needed for describing the S/C encounter with MCs.

Those parameters can be used for studying physical relationships between MCs and magnetic structures of the solar source regions. They include:

(1) What determines the MC axis directions?

(2) How consistent is the correspondence:

solar N-/S-hemisphere and R/L chirality?

Careful fittings are needed, uniqueness not guaranteed.

Thank you

for your attention!